| C.I.P. | 357 SIG<br>Country of Origin: US | TAB. IV<br>Date 95-03-09<br>Revision 08-09-23 |
|---|---|---|

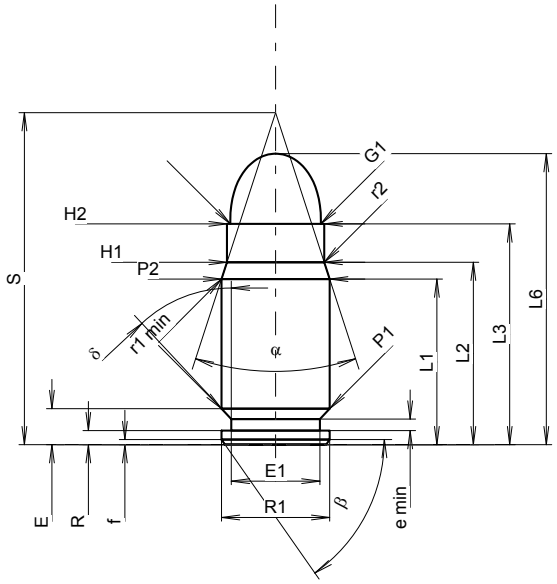


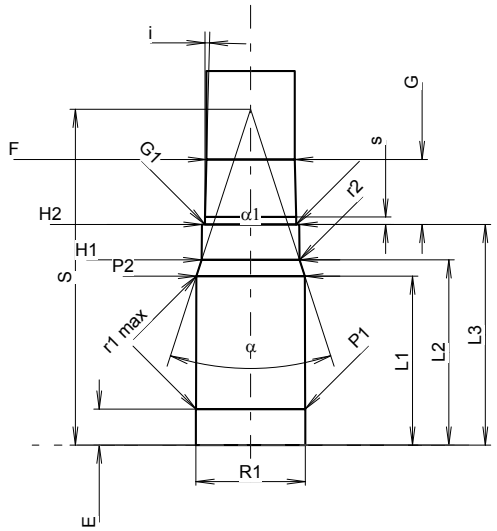


Scale 1.33:1

## CARTRIDGE MAXI

**Lengths**

| | | | |
|---|---|---|---|
| L1 1) | = | 16.48 | -0.20 |
| L2 1) | = | 18.16 | -0.20 |
| L3 1) | = | 21.97 | |
| L4 | = | | |
| L5 | = | | |
| L6 | = | 28.96 | |

**Case Head**

| | | |
|---|---|---|
| R | = | 1.40 |
| R1 | = | 10.77 |
| R3 | = | |
| E | = | 3.59 |
| E1 | = | 8.81 |
| e min | = | 1.14 |
| δ | = | 43° |
| f | = | 0.51 |
| β | = | 55° |

**Powder Chamber**

| | | | |
|---|---|---|---|
| P1 | = | 10.77 | |
| P2 1)* | = | 10.77 | -0.20 |

**Junction Cone**

| | | |
|---|---|---|
| α * | = | 36° |
| S * | = | 33.05 |
| r1 min | = | 1.52 |
| r2 | = | 3.81 |

**Collar**

| | | |
|---|---|---|
| H1 * | = | 9.68 |
| H2 1) | = | 9.68 |

**Projectile**

| | | |
|---|---|---|
| G1 1) | = | 9.03 |
| G2 | = | |
| F | = | |
| L3+G 1) | = | 28.44 |

**Pressures (Energies)**
**Method Transducer**

| | | | |
|---|---|---|---|
| Pmax | = | 3050 | bar |
| PK | = | 3508 | bar |
| PE | = | 3965 | bar |
| M | = | 10.50 | |

**Miscellaneous Dimensions**

| | | |
|---|---|---|
| Fe 1)6) | = | 0.20 |
| delta L | = | |

## CHAMBER MINI

**Lengths**

| | | |
|---|---|---|
| L1 | = | 16.82 |
| L2 | = | 18.44 |
| L3 1) | = | 21.97 |

**Breech**

| | | |
|---|---|---|
| R | = | |
| R1 | = | 10.88 |
| R2 | = | |
| R3 | = | |
| r | = | |

**Powder Chamber**

| | | |
|---|---|---|
| E | = | 3.59 |
| P1 1) | = | 10.86 |
| P2 * | = | 10.80 |

**Junction Cone**

| | | |
|---|---|---|
| α 1)* | = | 36° |
| S * | = | 33.44 |
| r1 max | = | 1.27 |
| r2 | = | 3.81 |

**Collar**

| | | |
|---|---|---|
| H1 * | = | 9.75 |
| H2 1) | = | 9.70 |

**Commencement of Rifling**

| | | |
|---|---|---|
| G1 1)* | = | 9.09 |
| G 1) | = | 6.47 |
| α1 * | = | 180° |
| h | = | |
| s | = | 0.74 |
| i 1)* | = | 1°30' |
| w | = | |

**Barrel**

| | | |
|---|---|---|
| F 1)* | = | 8.79 |
| Z 1) | = | 9.02 |

**Grooves**

| | | | |
|---|---|---|---|
| b | = | 2.69 | |
| N | = | 6 | |
| u | = | 406.40 | |
| Q | = | 62.57 | mm² |

Dimensions in << mm >>
Dimensions and Tolerances for Proof Barrels
see Appendix CR 1.

Notes:
1) Check for safety reasons
6) Headspace on Case Mouth
* Basic dimensions